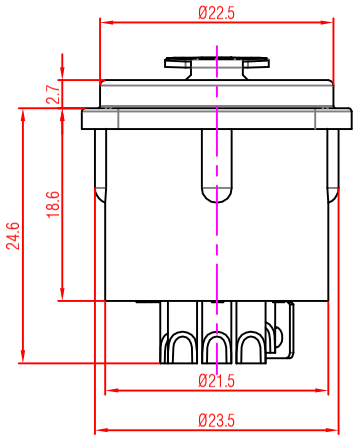

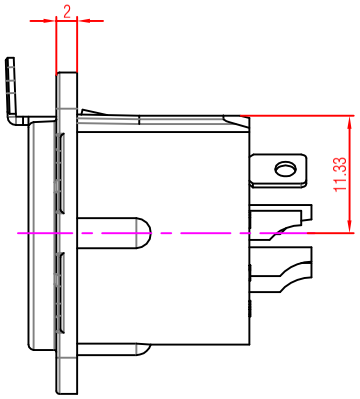

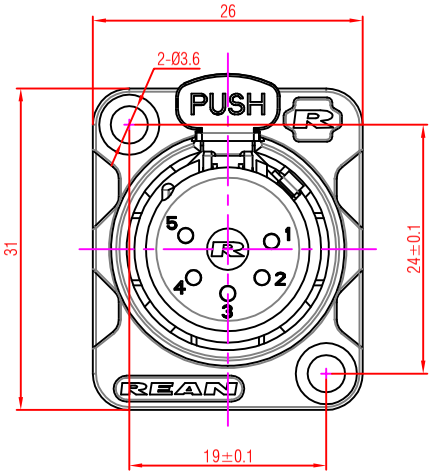

Note:

1. All dimensions in mm.
2. Tolerances not specified is ±0.10mm.

				THIS DOCUMENT IS THE PROPERTY OF NEUTRIK. NO PART THEREOF MAY BE REPRODUCED AND USED WITHOUT THE PRIOR WRITTEN CONSENT OF THE OWNER	Material:	Scale: 2:1		Date:	Name:
							Designer:	2020.11.17	Jie.Yu
							Checked:	2020.11.17	Xiaonan.Wang
							Approved:		
				Title: RC5FDL			Replaced By:		1
							Replaces:		1
Rev.	Revision Details	Date	Name	REAN			Drawing No.:		